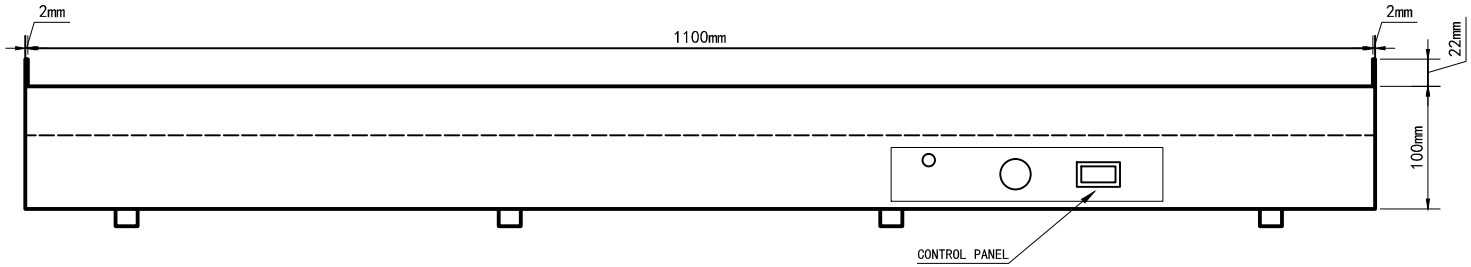

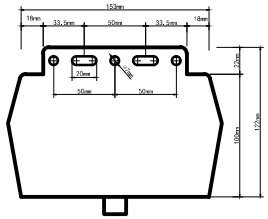

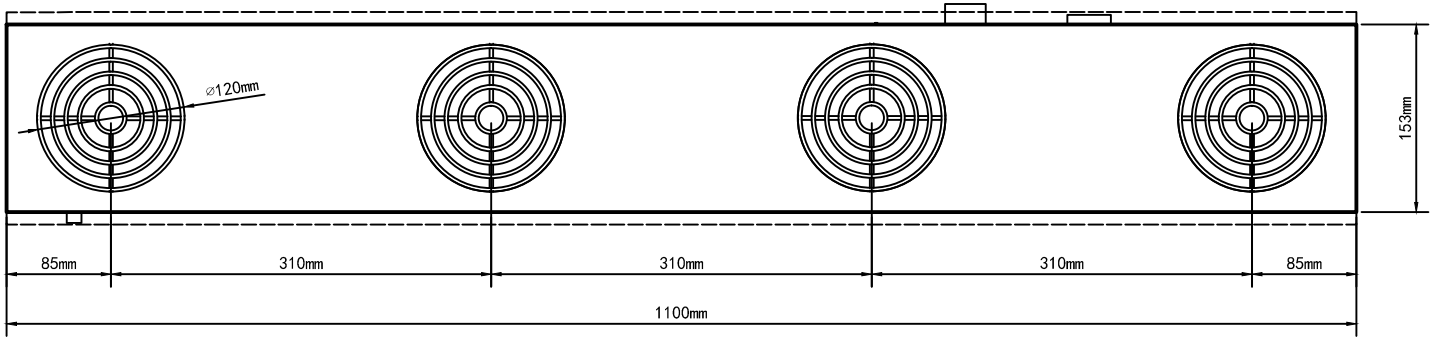

ALL DIMENSIONS FOR REFERENCE ONLY

D	MFS SRM	428 3-18-04	SVCOR INDUSTRIAL STATIC CONRTOL	the SVCOR company,inc. No.66 North Street JingYuan,BDA,Beijing	TITLE SV-2014 Ionizing Blower	DRAWING NUMBER 2000242
REV	CHECKED APPROVED	ECN DATE				